PSP MATRIX SFC FLAT RAINSCREEN PANEL
SPECIFICATION SHEET/ORDER FORM

SHEET NO. ____ OF ____

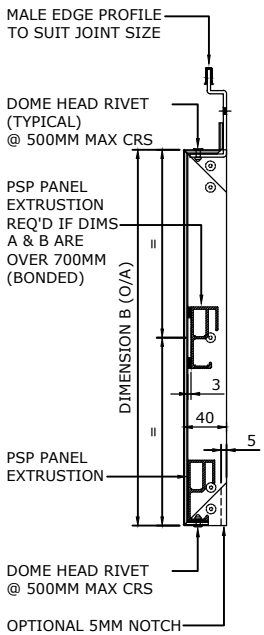

SECTION

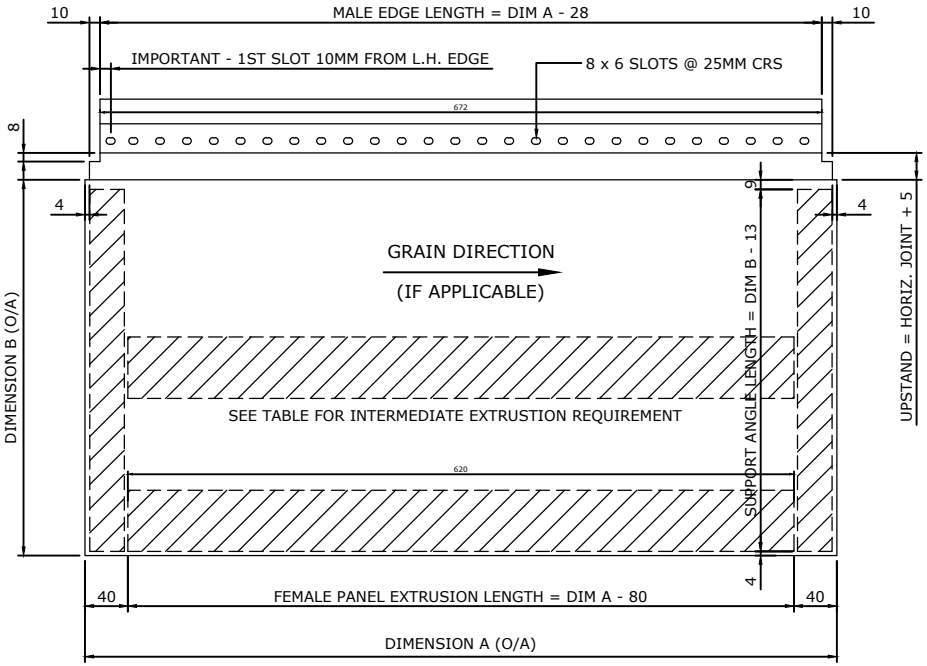

ELEVATION ON FRONT FACE OF PANEL

PANEL REF:	PANEL FACE LENGTH (A):	PANEL FACE HEIGHT (B):	INTERMEDIATE EXTRUSION REQ'D (Y/N):	5MM NOTCH REQ'D (Y/N):	NO. REQ'D:

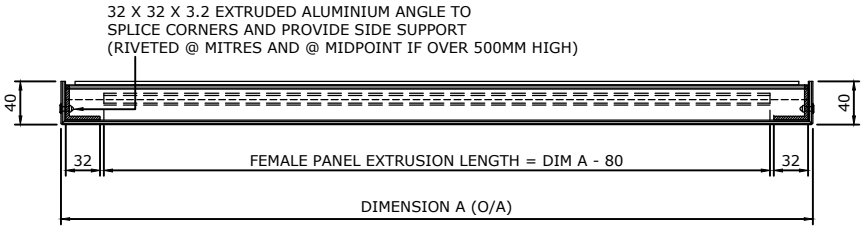

PLAN SECTION THROUGH PANEL

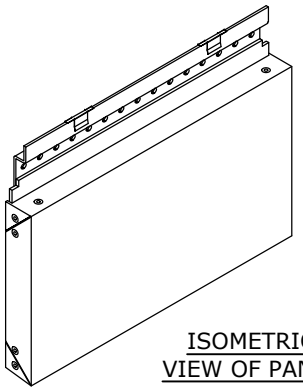

ISOMETRIC VIEW OF PANEL

PVC JOINT CLIPS: (REQ'D TO MALE EDGE @ 1M MAX CRS)	
	NO REQ'D:

NOTES

BASED ON 20MM JOINTS, MAXIMUM MATRIX SFC PANEL SIZES ARE 3920MM (A) x 1400MM (B). THIS IS DUE TO MAXIMUM FLAT SHEET SIZE OF 4000MM x 1500MM.

PANEL SIZES GIVEN ARE FACE SIZES NOT MODULE SIZES.

GUIDE TO INTERMEDIATE EXTRUSION REQUIREMENT		
	PANEL LENGTH UP TO 700MM	PANEL LENGTH 701MM-3920MM
PANEL HEIGHT UP TO 700MM	NOT REQUIRED	NOT REQUIRED
PANEL HEIGHT 701MM-1400MM	NOT REQUIRED	REQUIRED

CLIENT:	
PROJECT:	
DATE:	
CLIENT REF:	
PSP REF:	

PANEL OUTER SKIN:	
MATERIAL:	
GAUGE:	
COLOUR:	

HORIZONTAL JOINT SIZE:		VERTICAL JOINT SIZE:	

All Saints Industrial Estate
Shildon
County Durham
DL4 2RD

Tel:- 00 44 (0) 1388 770490
Fax:- 00 44 (0) 1388 778068
Email:- design@pspuk.com

www.pspuk.com